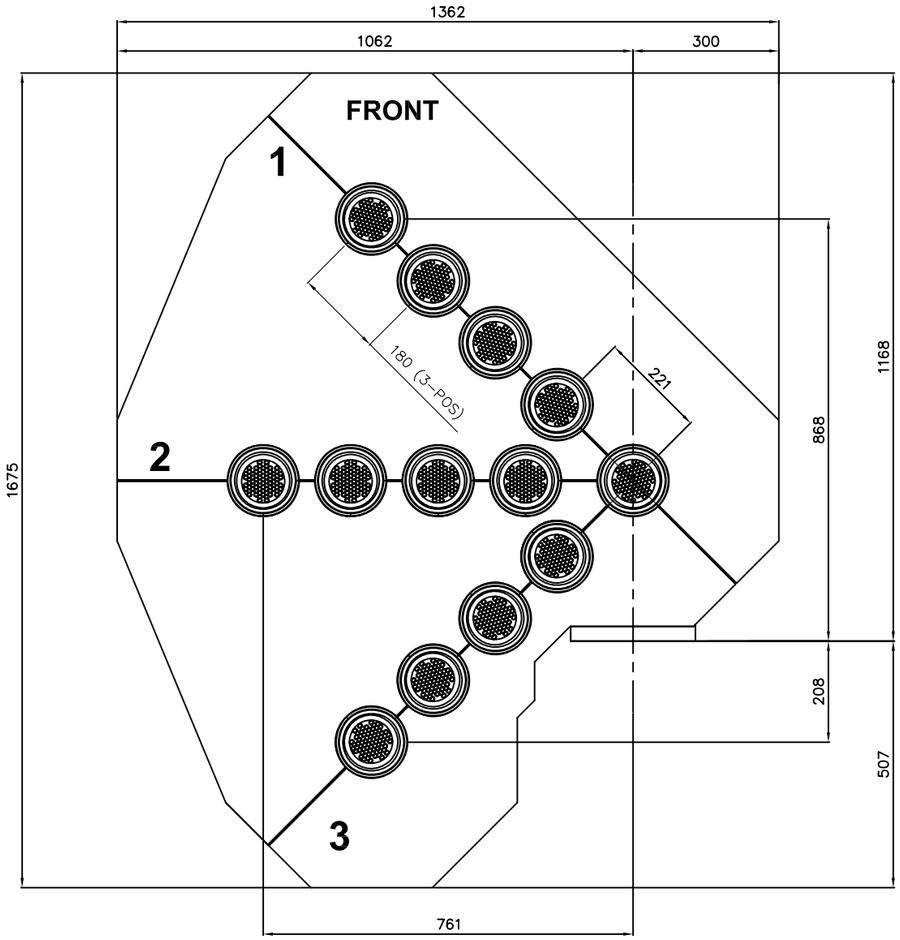

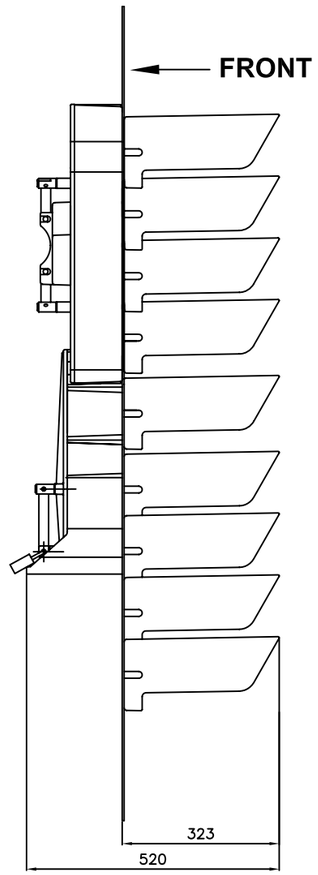

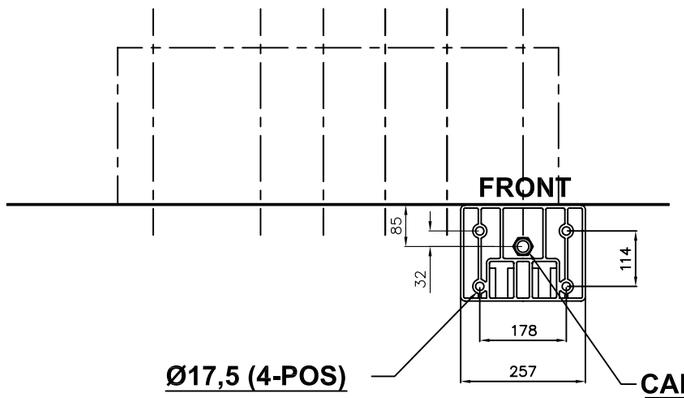

VIEW ON A

ALL DIMENSIONS IN mm UNLESS OTHERWISE STATED

DO NOT SCALE

ORIGINAL DRAWING FRAME A1 | DO NOT SCALE

0	26/03/07	MD	DCC No. 3564
ISS	DATE	INI	ALTERATIONS

DORMAN

SOUTHPORT PR9 8LA ENGLAND

SPACE ENVELOPE/MECHANICAL INTERFACE DRAWING

TITLE JUNCTION INDICATOR POS 1+2+3

MATERIAL

TOLERANCES		
X	+ / −	0,25
X,0	+ / −	0,10
X,00	+ / −	0,05
X,000	+ / −	0,025
ANGULAR	+ / −	0.25°

PROJECT No. 104

THIRD ANGLE PROJ

Document N° a104-6817-1

DRAWN MD

CHECKED IW | AUTH. IW

DATE 26/03/2007

SCALE 1:1

SHEET 1 OF 1 SHEETS

THIS DOCUMENT AND THE INFORMATION THEREIN IS CONFIDENTIAL AND MAY NOT BE USED OR DISCLOSED WITHOUT WRITTEN AUTHORIZATION

DRAWING No PART No.

0086/021008

DORMAN REF No. PLJIS/123---/P0

CUSTOMER REF No.